Stern Bearing: D=40mm, 45mm

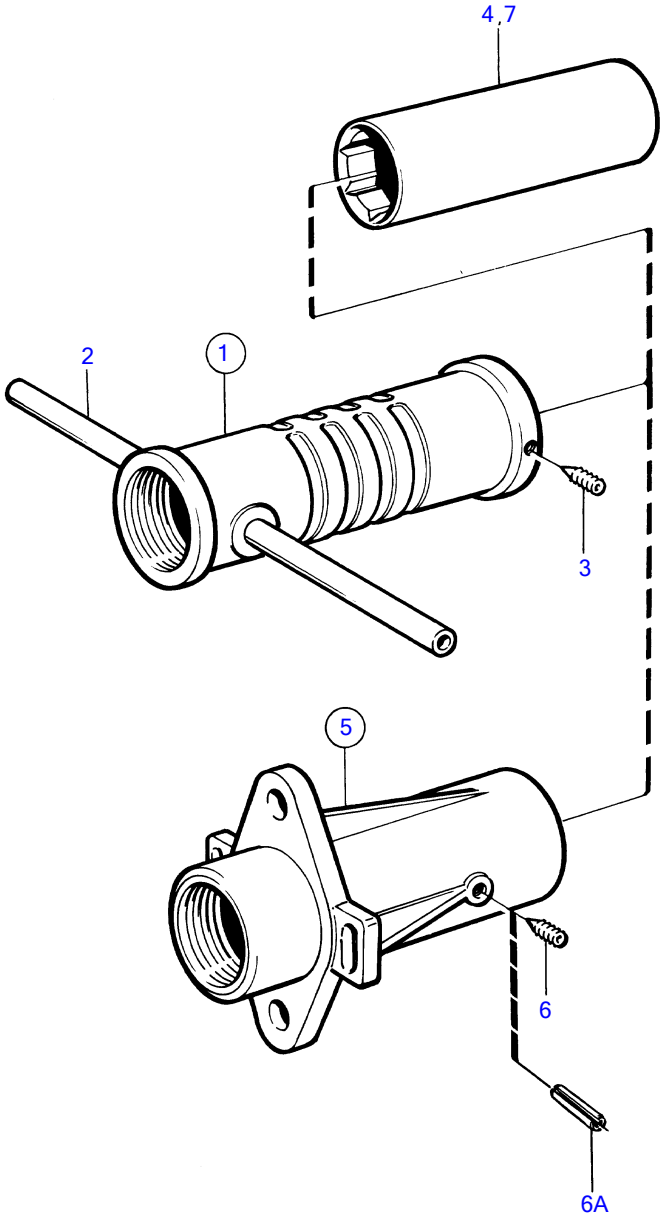

11583

REF	PART NO.	QTY	DESCRIPTION	NOTES
5	828162	1	Stern bearing	D=40mm
	828188	1	Stern bearing	D=45mm
6A	(828296)	1	▪ Spring pin	Obsolete part
7	828131	1	▪ Rubber bearing	D=40mm
	828187	1	▪ Rubber bearing	D=45mm